Aim: Detailed analysis of inverter with and without capacitor (1pf).The analysis will be as follows:

(i) Transient Analysis.
(ii) DC sweep Analysis.

Theory:

Noise Margin Analysis of inverter:

In steady state the input is fixed at either logic 0 or logic 1,but in reality in a chip it is not true that the signal will be so ideal. So, therefore we have noise perbutration around the inverter and robust inverter is immune to noise in steady state.

If the noise is in region 1 and region 3 the noise is getting killed because gain=0.All noise is attenuated.

If we see region 2 and have some noise so, the noise in this region get amplified because the gain in this region is extremely high which means the output will get inverted.

So as we are moving left to right our gain is going through some changes then the region of transition were below some level it is treated as logic '0' and above some level it is treated as logic '1'

The transition value for gain is dVo/dVin=gain=-1.

Region 1: NMOS-Saturation, PMOS-Linear.

Region 2:NMOS-Saturation, PMOS-Saturation (Intermediate region)

Region 3: NMOS-linear,Pmos-Saturation.

The region 2 is the region of importance where both nmos and pmos both are in transitioning phase and this is the point were actual transitioning is taking place.

So, if Vin>Vih ➔ input is logic '1'.

If Vin<Vil➔ input is logic'0'.

So, input lands up between $V_{iL} <= V_{in} <= V_{ih}$ region it does not mean the output will get stuck because in chip there is always some noise which is perturbing in all wires,some small noise that will get amplified and eventually depending on polarity of noise,the logic will switch to 0 or 1 because the gain in this region is extremely high that even a small perturbation can switch it logic in high or logic low and the problem is it depends on polarity of noise.So,sometimes it can go to logic '0' or logic '1' and therefore it is intermediate region.

For short channel devices: (In case of short channel devices there is channel length modulation)

ViH=Vm-Vm/g and **ViL**=Vm-[(Vm-Vdd)/g]

Noise margin High=VoH-ViH.

Noise margin low =ViL-VoL

For Long channel Device:VoL is very close to zero.So,where the input is intermediate is very narrow i.e 2VoL and this not suprising because the slope at Vin=Vout is -infinite.So this is closest to we get an ideal inverter or VTC.

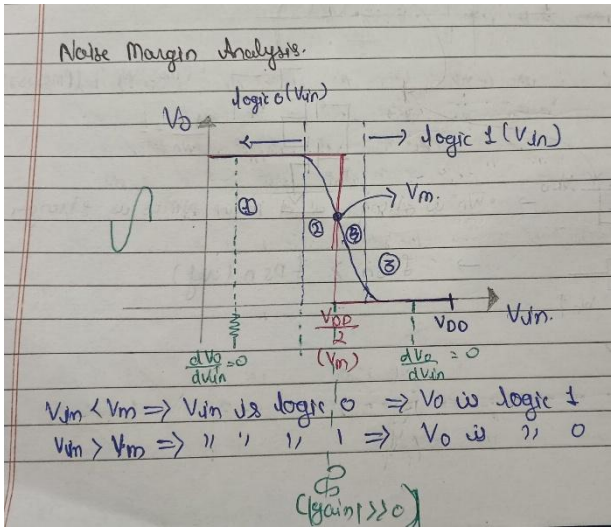

Voltage transfer characteristics for short channel device

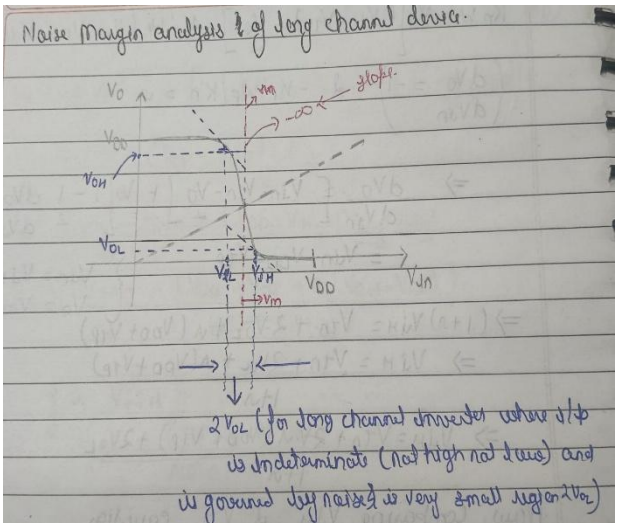

Voltage transfer characteristics for Long channel device

Simulations:

(i) Cmos inverter (without any load)

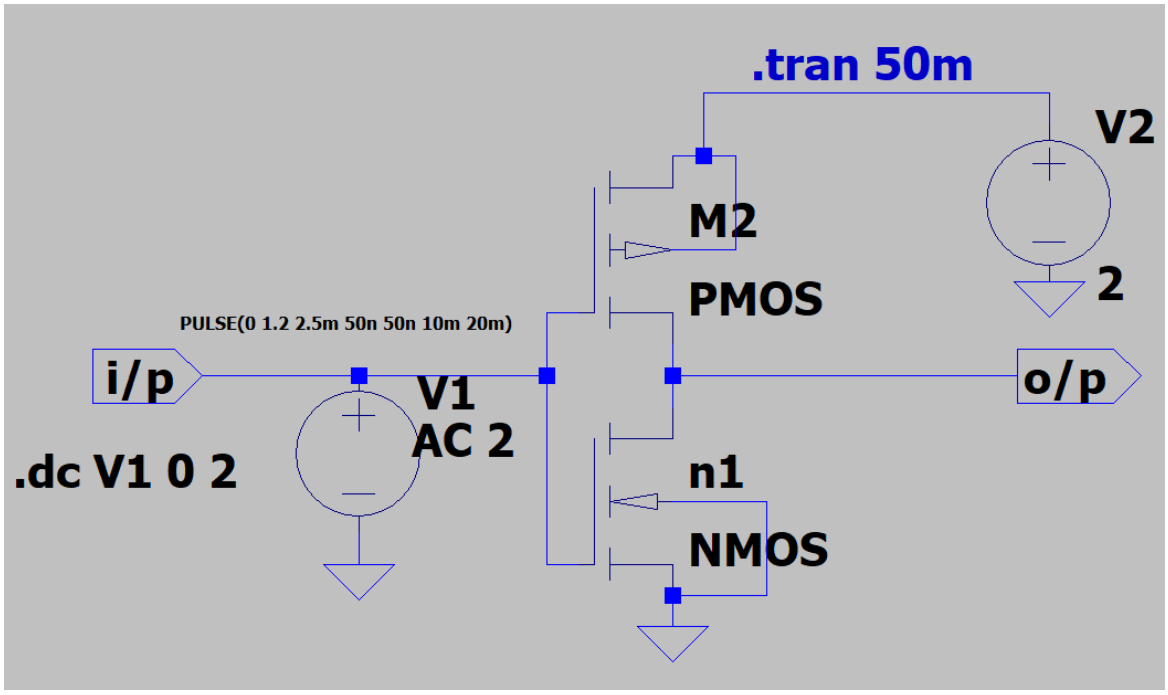

Cmos inverter circuit

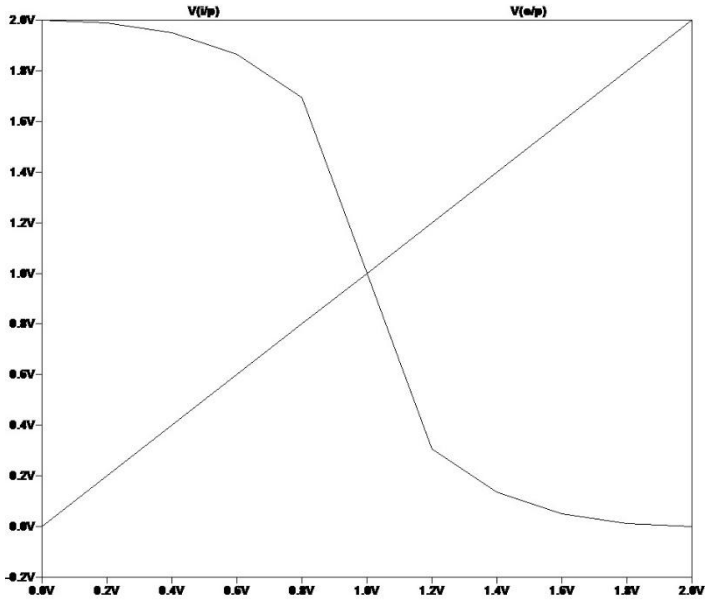

Dc sweep analysis of inverter

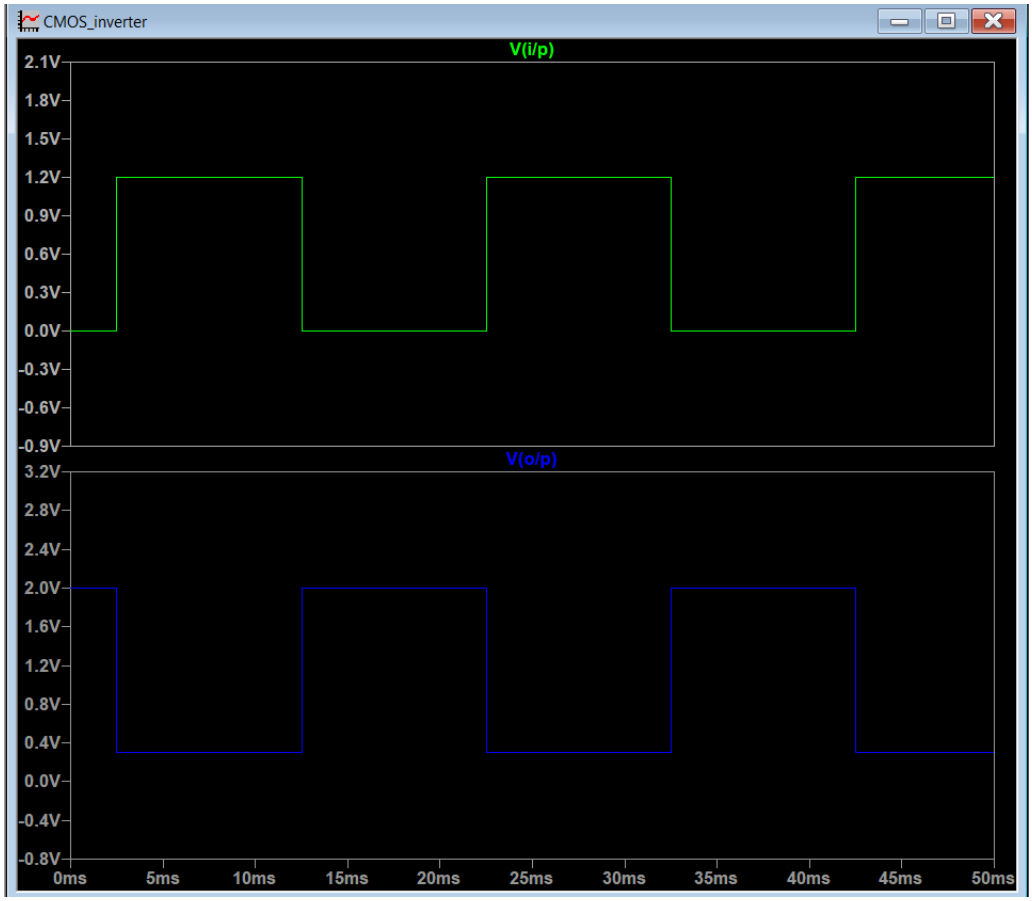

Transient analysis of inverter

(ii) CMOS inverter with load capacitance of 1 pf

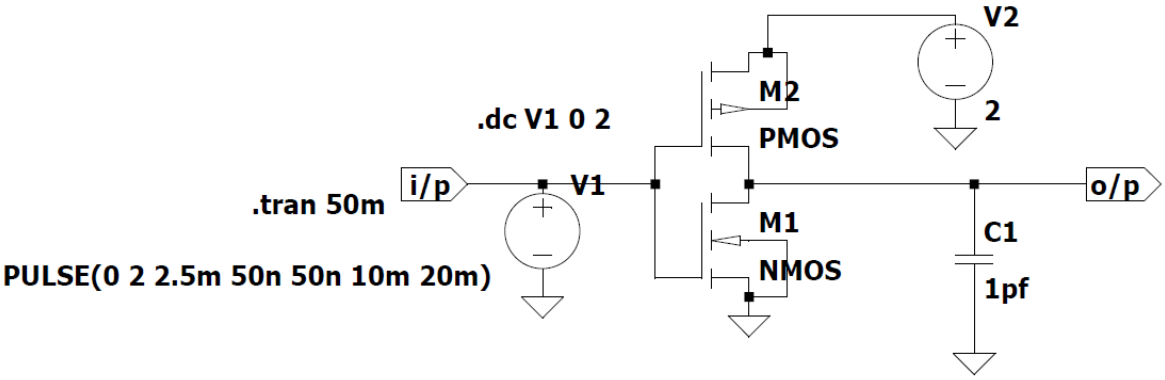

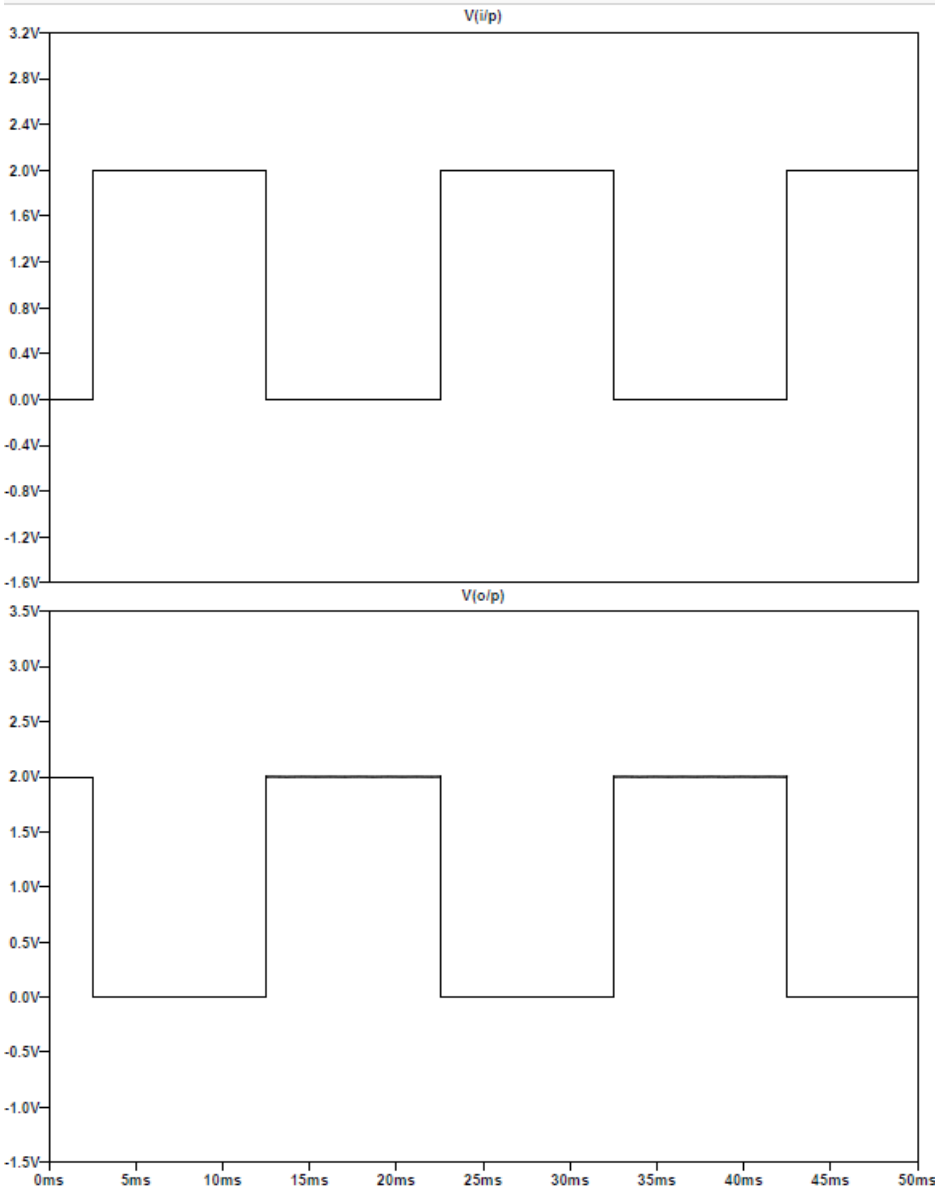

Transient Simulation Cmos inverter with load capacitance 1pf

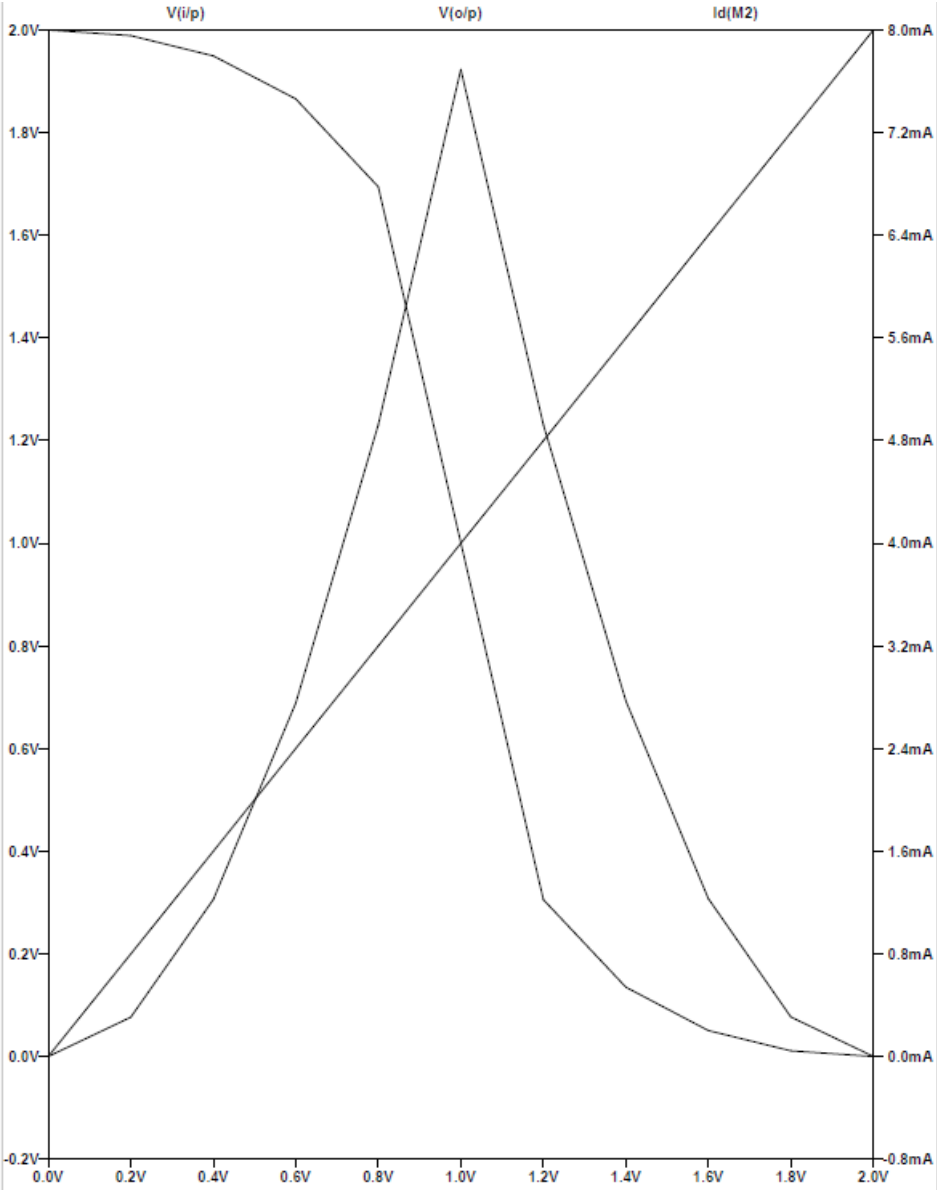

DC Sweep Analysis with inverter crossing current

Analysis :

Short circuit current: 7.6415814mA

Lekeage current:

When Nmos is off: -354.90541pA

When Pmos is off:2pA

Note:The above simulation is done by keeping NMOS and PMOS channel width equal.

Now, we will see same simulation with NMOS W=1u and PMOS W=2u.

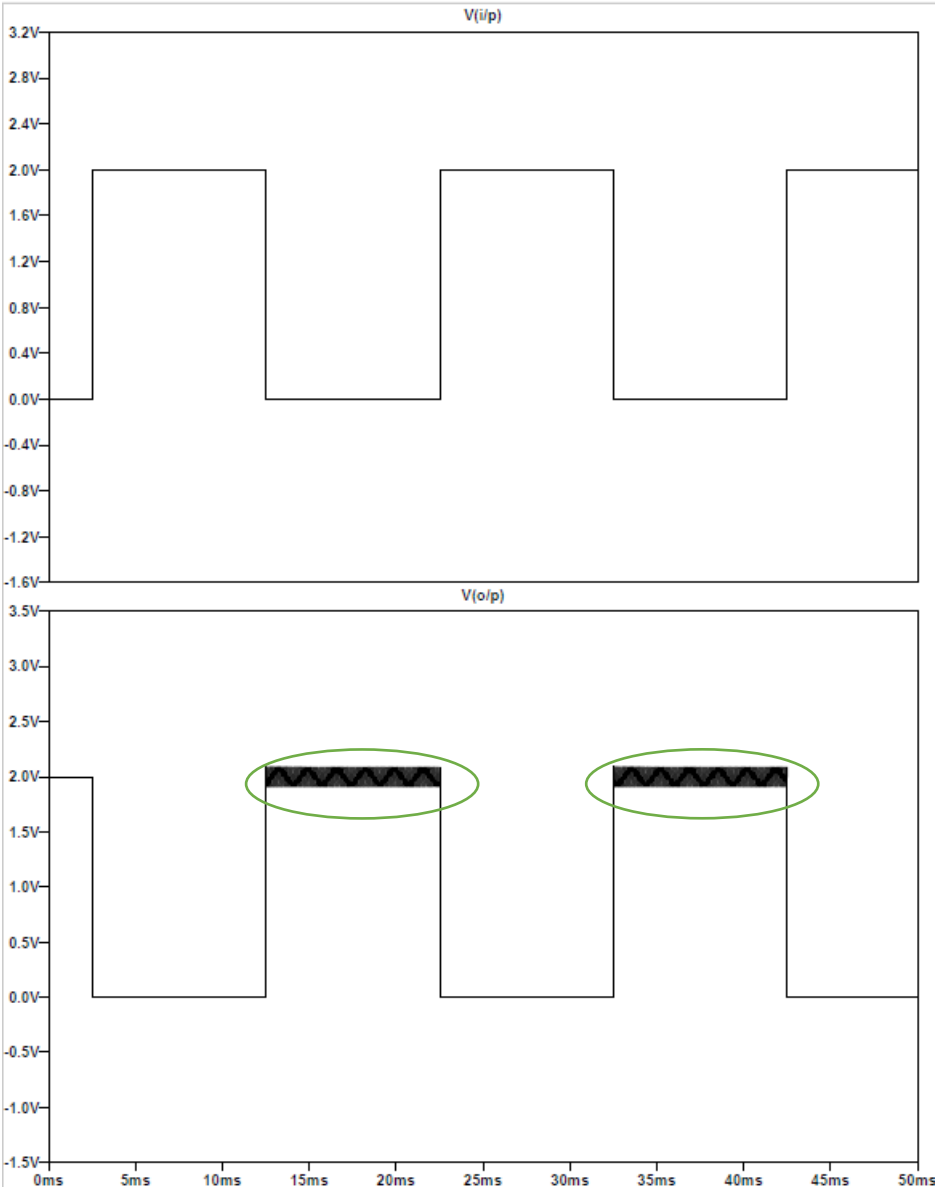

Observation: Increase in noise when output is inverted to logic ‘1’.

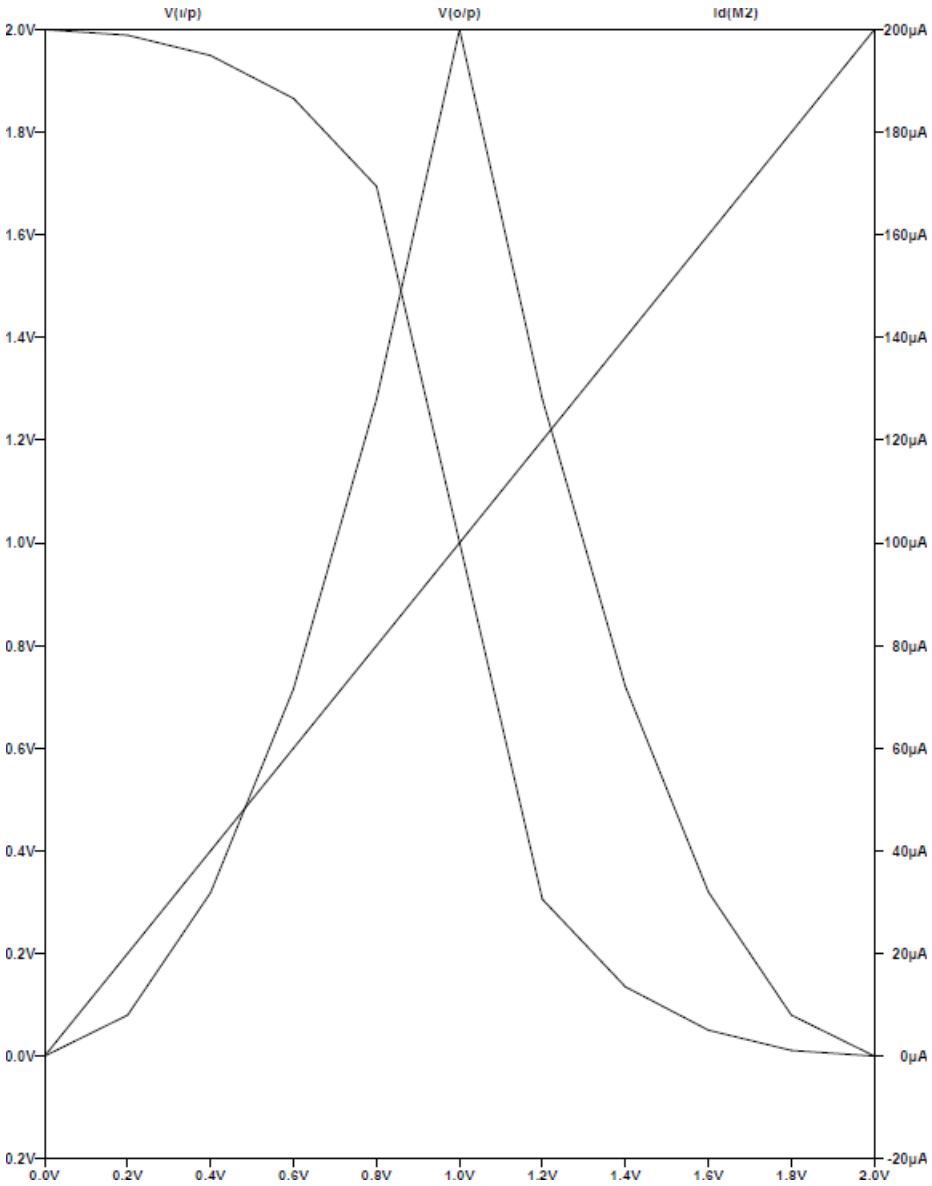

Analysis:

Short circuit Power: 199.56341µA

Lekeage current when Nmos is off: -5.6392239pA.

Lekeage current Pmos is off: 2pA.

Observation: The total short circuit current when Pmos width is doubled w.r.t Nmos. Also, the lekeage current when Nmos is in off state is increased by 2pA approximately.

Conclusion: The analysis of CMOS inverter is being done in threes cases when loading capacitance was not there,with loading capacitance and when Pmos width was doubled to Nmos width.

According to theory the indeterminate is region is the region of observation, means when there is transitioning of input from 0 to 1 and this is the region where both Pmos and Nmos are in saturation region. For short channel device the point of is when the gain of the slope i.e dv0/dvin= g =-1 and for long channel device the this slope is almost equal to infinity VTC. Altough the pratical analysis of long

channel inverter we found the slope as is as shown in th below figure means the inverter switching point is some deveiations from the slope even in the case of long channel inverter.

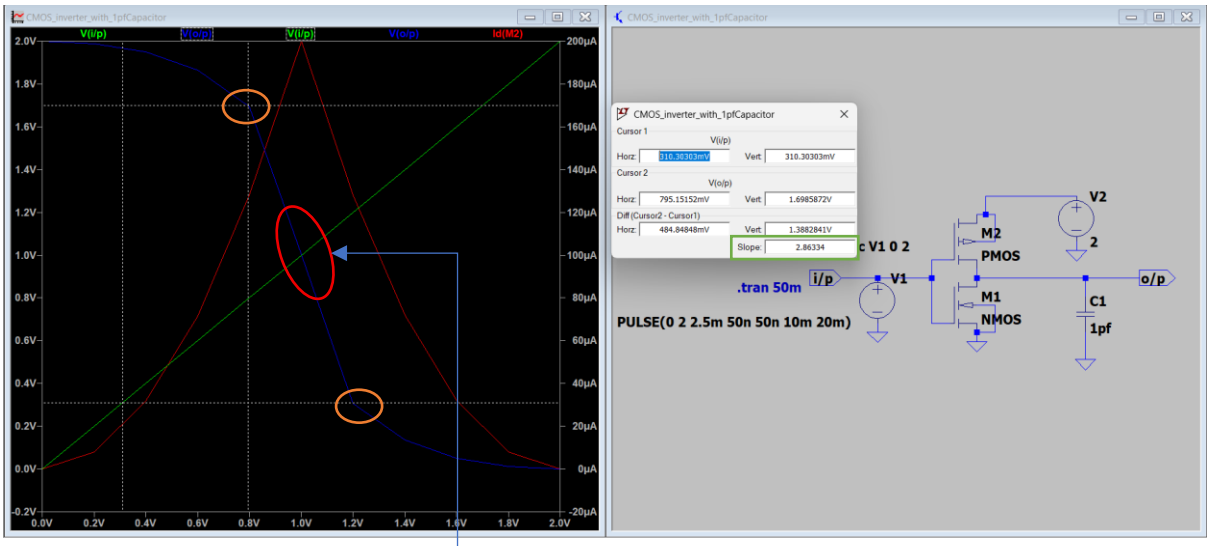

Vsp the inverter switching point where the transition will take place is not exactly align with the orange boxes where exactly transition is happening.If it would have shown ideal characterstics the slope somewhat near to steep where slope would be almost equal to infinity